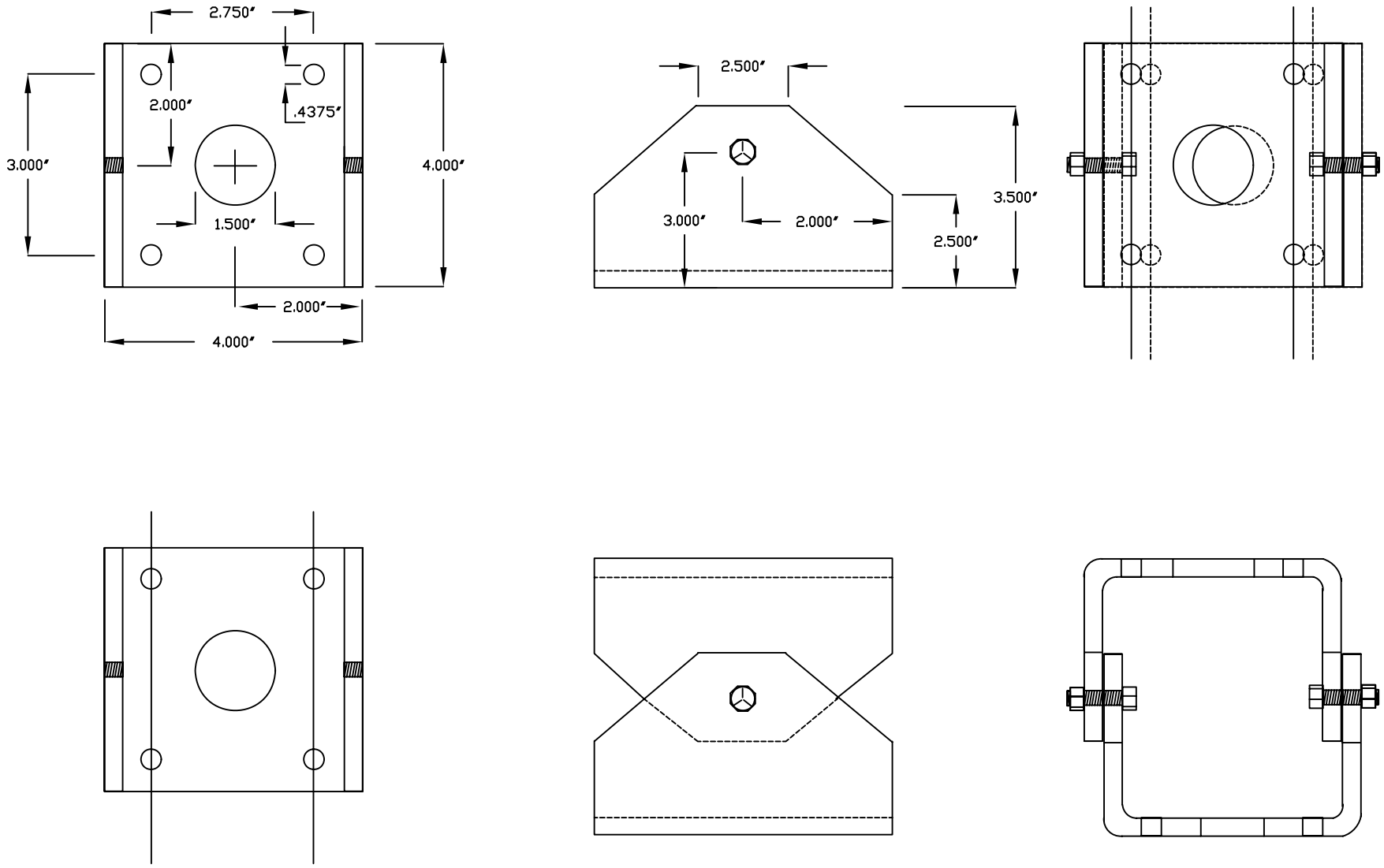

NOTES :

1) BRACKET SHALL BE CONSTRUCTED OF 4" X 1/8" STAINLESS STEEL PLATE.
2) BOLTS AND LOCK NUTS SHALL BE 5/16"X 1" NC STAINLESS STEEL.
3) U-BOLT, BASE AND NUTS SHALL BE 5/16" STAINLESS STEEL ASSEMBLY.

REV	DATE	DESCRIPTION	BY	APPD

DRAWN/DATE	CHECKED/DATE	APPROVED/DATE
26-May-01	MJB/26-May-01	SMH/26-Feb-02

XXXXXXX
XXXXXX
XXXXXX
XXXXXX
XXXXXX

Custom 4"x 4" Pivot Bracket
XXXXXX
XXXXXX
XXXXXX

DWG. 0715-LR911-44S

REV: 0
SHEET 1 OF 1